# Linear actuator

## CAJ systems

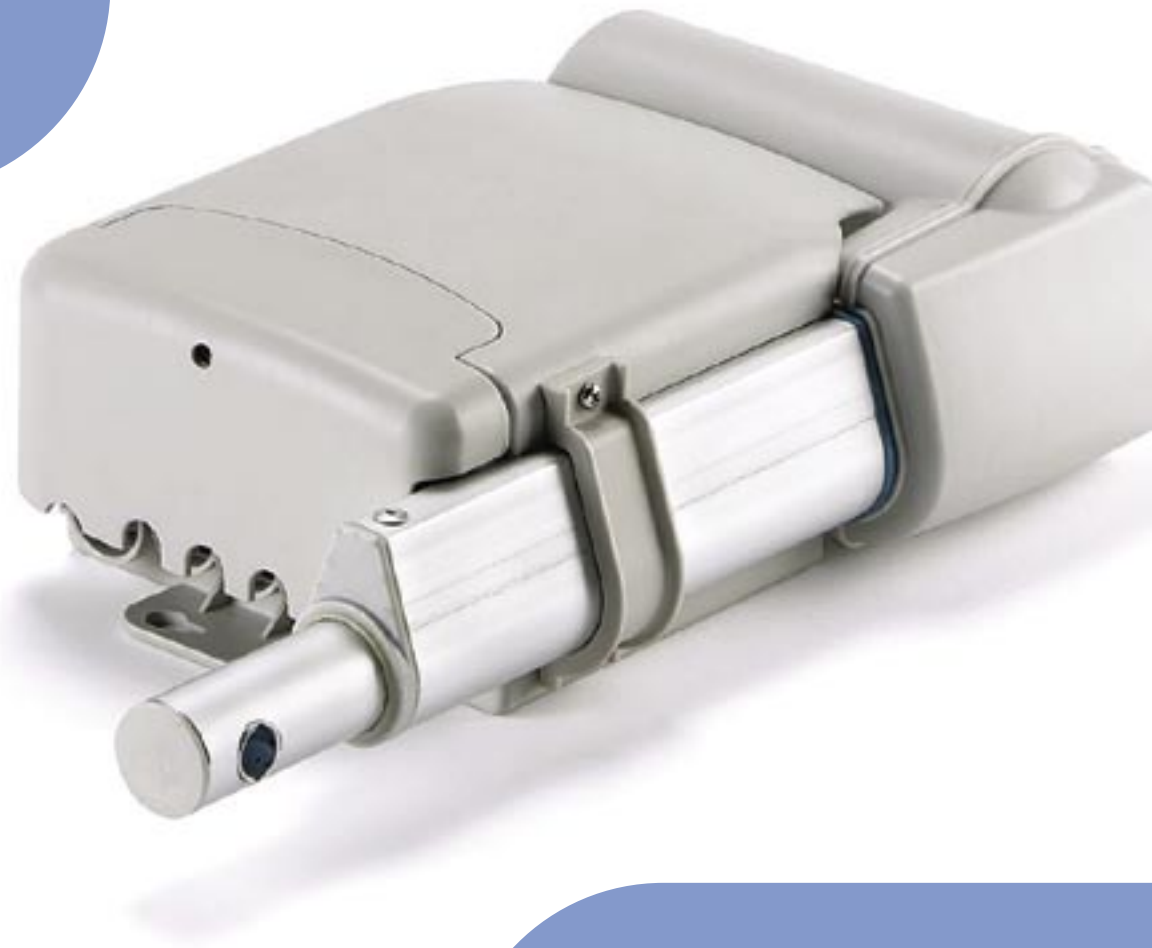

# Content


3 The CAJ series actuation system
6 CAJA 30 linear actuator
8 CAJA 35C linear actuator
10 CAJA 60 linear actuator
12 CAJC 41 & 44/54 control boxes
14 CAJH 1 handsets
16 CAJH 4 handsets
18 CAJP 4 nurse panel
19 Mains cables


The SKF brand now stands for more than ever before, and means more to you as a valued customer.

While SKF maintains its leadership as the hallmark of quality bearings throughout the world, new dimensions in technical advances, product support and services have evolved SKF into a truly solutions-oriented supplier, creating greater value for customers.

These solutions encompass ways to bring greater productivity to customers, not only with breakthrough application-specific products, but also through leading-edge design simulation tools and consultancy services, plant asset efficiency maintenance programmes, and the industry's most advanced supply management techniques.

The SKF brand still stands for the very best in rolling bearings, but it now stands for much more.

**SKF – the knowledge engineering company**

# The CAJ series actuation system

The CAJ series actuation system has been designed and developed specifically for medical and health care applications where reliability and safety are of paramount importance. This new actuation system features the all-new CAJA range of electro-mechanical actuators and 3 different universal control boxes. The system, which also includes operating devices, cables and battery, conforms with EN IEC 60.601.1 and UL 60.601.1 and other corresponding standards.

The CAJ series actuation system is convenient for the designer as well as service personnel. For the designer, there are no compatibility issues between the actuator, control boxes and operating devices. All components are available in one complete package. For maintenance personnel, rounded corners and the water resistant case make these units easy to clean. Service is also simplified, with easily detachable cables, and the built in SKF lifetime monitoring system with LED display, which will upload operating data into any Windows based PDA or computer.

**The hospital set**

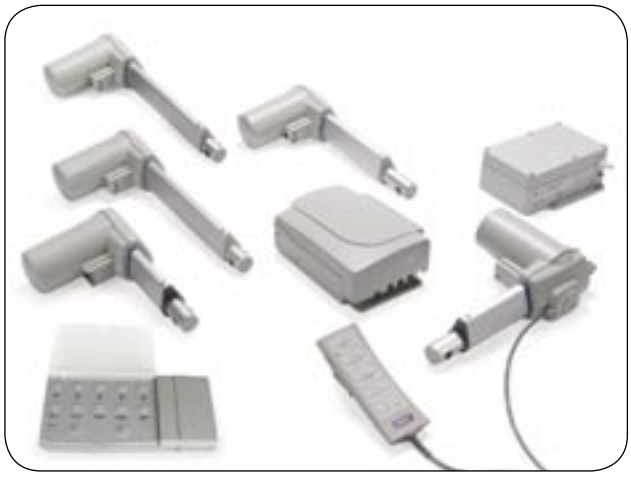

The hospital set includes any of the 3 types of actuators listed in the catalogue. It features the CAJC 44/54 control boxes which support the locking function. Either control box also supports both the CAJH 4 handset and the CAJP 4 nurse panel as well as the CAJB battery box. The system, which can drive up to 5 actuators, conforms with EN IEC 60.601.1 and UL 60.601.1.

**The homecare set**



This system, developed for homecare applications, includes any of the actuators listed in the catalogue. It uses the CAJC 41 control box and the CAJH 1 handset. The system, which can drive up to 4 actuators, conforms with EN IEC 60.601.1 and UL 60.601.1.

**CAJA Linear actuators**
The CAJA range of actuators has a number of built-in safety features. From an overall design standpoint, CAJA actuators are designed to provide a high degree of rigidity. This is particularly important in medical and health care applications where the actuator may need to accommodate heavy static loads.
**Mechanical brake** - All CAJA actuators are equipped with a self-locking mechanical brake to keep the actuator push tube in position.
**Limit switches** - As standard, built-in limit switches shut off current to the motor without user intervention. Redundant limiters are provided by mechanical stops to prevent the push tube from over-extending or over-retracting.
**Back-up nut** - Provides an extra measure of safety when the actuator is in push mode. When activated, the actuator will only retract and will not continue to extend.
**No pull function** - The risk of jamming is reduced in bed movements. End stop prevents the tube from being disengage.
**Thermoswitch** - The built-in thermoswitch shuts off the power supply if the motor begins to overheat.
**SKF lifetime monitoring** -This unique SKF monitoring system continuously monitors actuator usage and tracks abuse. Unlike competitive designs, the monitoring system is built into the actuator, to provide true and accurate readings.
**Tracking** -The Actuator Lifetime Monitoring tracks the number of starts and stops. It also monitors and records the operating temperature of the actuator.

**CAJC Control system**
The CAJC control system has a number of built-in functionality and safety features.
**Overload protection** - The CAJC control unit transformer is protected against overload by means of a thermal shield. The CAJC44/54 control unit possesses an individual and a total power cut-off. Individual power cut-off protects the actuator in the event that the current maximum is exceeded which can occur when coming into contact with a stop or through the overloading of an actuator. In addition, similarly to the CAJC41, the total power cut-off protects the control unit against overload if several motors are in operation at the same time. It will protect the CAJA actuators from reaching the absolute mechanical load.
**Circuit protection** - CAJC contains a relay protection circuit to prevent the electrical arc from power surges and stops.
**Redundant power switches** - For an extra measure of safety, the redundant switches in the control box cut current to the actuator.
**Self monitoring device** - embedded in the CAJC 44/54 control box, a self monitoring device cuts current to the actuator if a fault is detected in the box or operating device.
**Fire resistant** - The standard housing for all products, is made from UL 94 V0 polymer, is resistant to heat and fire.
**Earth terminal** - All CAJC control boxes have a double electrical isolation for an enhanced electrical safety. In option, the CAJC can be equipped with a earth terminal used to connect the potential equalization conductor of the medical equipment.

**Safety features - standard**
- Integrated limiter switches for automatic motor shut-off to control the end of travel independently of the control box
- Mechanical end stops activate in the event of a single fault
- Maintains the minimum safety factor of 2,5 under static loads up to 15 000 N
- Integrated brake to maintain self-locking and stability under maximum static load
- Quick release solution enables rapid CPR (Cardio Pulmonary Resuscitation) intervention
- Die cast gearbox housing and attachments provide additional stability during operation
- Plastic housing in polymer UL94 V0

**Safety features - optional**
- Thermo motor switch
- Actuator lifetime monitoring for safety, service and maintenance
- Back-up nut in push mode

**Operational features - standard**
- Stroke up to 400 mm is convenient for the bed elevation
- Retracted length S+167 mm result in compact bed design solutions
- Detachable cable for quick assembly & service
- SKF DIN8 standard makes compatibility with SKF control boxes
- Four position attachment orientation simplifies engineering of the bed
- Operating temperature: +10 to +40 °C
- Conforms with EN IEC 60.601.1 and UL 60.601.1 for medical devices, beds conform with IEC 60.601.2-38 and EN 1970
- Noise level: 47 dB - EN ISO 3746 Class III for quiet running
- Duty factor: 10 % (on/off)

**Operational features - optional**
- No-pull function
- Customised stroke/retracted length relation
- Encoder compatible with SKF control box

**Control boxes**
CAJC control boxes were specially designed to drive up to 5 CAJA actuators. Two models of the CAJC control box are available: The CAJC 41 and the CAJC 44/54.
The CAJC 41 is particularly suitable for homecare beds while the CAJC 44/54 with its extended safety and life time features, is suited for hospital beds. Both control boxes conform to EN IEC 60.601.1 and UL 60.601.1

**CAJC 41** supports the CAJH 1 handset.

**CAJC 44/54** supports each of the following: locking function, battery, external switches, CAJH 4 handset, CAJP 4 nurse panel and CAJB battery.

**CAJC 44/54**



**CAJC 41**



## Functionalities

| N° of actuators | | Extended safety | | Extended functionalities | | |
|---|---|---|---|---|---|---|
| Up to 4 | Up to 5 | Reducdant switch | Auto check | Locking function | Battery | External switches |
| ■ | | ■ | | | | |
| | ■ | | | ■ | ■ | ■ |

## Compatility

| Control unit | Handset | | Nurse panel | Battery | External switch | Foot switch | |
|---|---|---|---|---|---|---|---|
| | CAJH 1 | CAJH 4 | CAJP | CAJB | CAJS | ST Cust. | STJ |
| CAJC 41 | ■ | | | | | ■ | |
| CAJC 54 | | ■ | ■ | ■ | ■ | | ■ |

## CAJA 30

The CAJA 30 is a fast and compact pushing actuator for strokes up to 400 mm. When used in pairs, these actuators are ideally suited for mattress positioning or bed elevation.



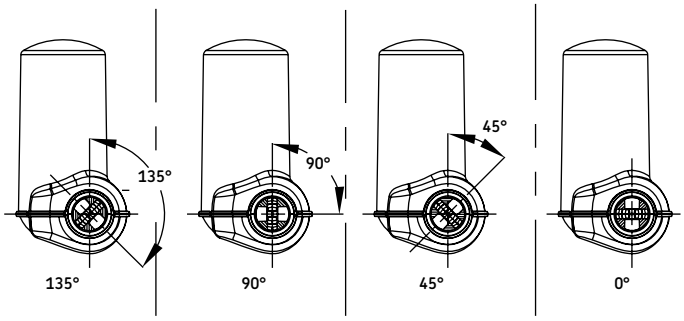


**Performance diagram:**

**Speed vs Load**

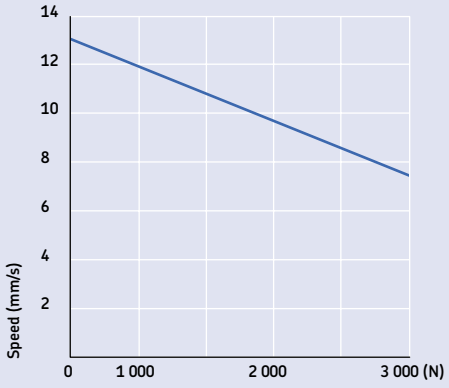


**Current vs Load**

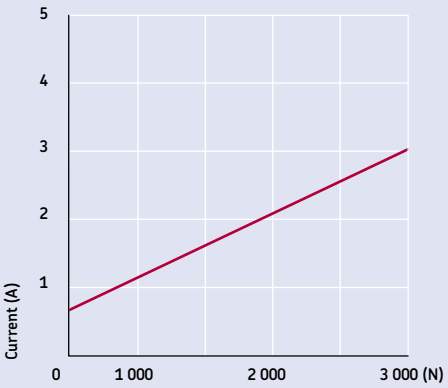


| Type | Force dynamic | static | Max. speed no load | full load | Stroke (S) | Retr. length* (L) | Voltage | Protection class | Weight |
|---|---|---|---|---|---|---|---|---|---|
| | N | N | mm/s | mm/s | mm | mm | VDC | IP | kg |
| **A30** | 3 000 | 6 200<br>7 500 | 13 | 7,7 | 400<br>300 | S+167/170 | 20-40 | 54/56 | 2,7 (S=400)<br>1,9 (S=100) |

*Tolerance +/-2 mm (and in addition +3 mm if U fork is used as front attachment)

## CAJA 30

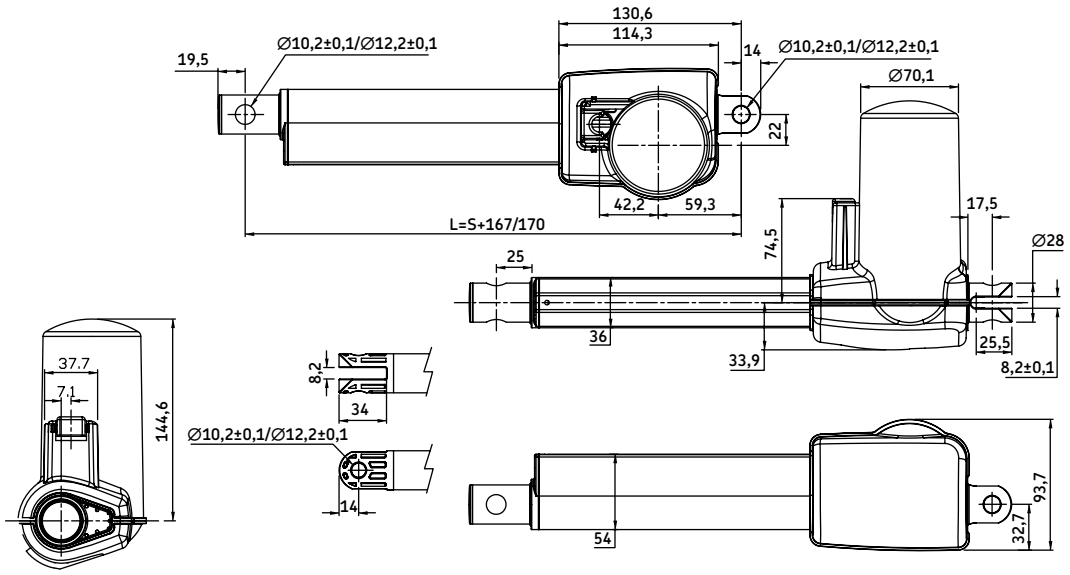


| | | | | | | | | | | | | | | | | | |
|---|---|---|---|---|---|---|---|---|---|---|---|---|---|---|---|---|---|
| | C | A | J | A | 3 | 0 | | | | | | | | U | | | | | | | |
| **Type** | | | | | | | | | | | | | | | | | | | | | |
| **Stroke** | | | | | | | | | | | | | | | | | | | | | |
| 100 mm | | | | | | | 100 | | | | | | | | | | | | | | |
| 200 mm | | | | | | | 200 | | | | | | | | | | | | | | |
| 300 mm | | | | | | | 300 | | | | | | | | | | | | | | |
| 400 mm | | | | | | | 400 | | | | | | | | | | | | | | |
| All other customised strokes between 30-400 mm | | | | | | | XXX | | | | | | | | | | | | | | |
| **Retracted length*** | | | | | | | | | | | | | | | | | | | | | |
| Standard (L=S+167/170 mm) | | | | | | | | 000 | | | | | | | | | | | | | |
| Customised length >S+167/170 mm | | | | | | | | XXX | | | | | | | | | | | | | |
| **Rear attachment** | | | | | | | | | | | | | | | | | | | | | |
| U-fork, metal, Ø 10,2 mm | | | | | | | | | A | | | | | | | | | | | | |
| U-fork, metal, Ø 12,2 mm | | | | | | | | | B | | | | | | | | | | | | |
| **Front attachment** | | | | | | | | | | | | | | | | | | | | | |
| Tube with hole and metal bushings, Ø 10,2 mm | | | | | | | | | | A | | | | | | | | | | | |
| Tube with hole and metal bushings, Ø 12,2 mm | | | | | | | | | | B | | | | | | | | | | | |
| U-fork end, metal, Ø 10,2 mm (increase "L" by 3 mm) | | | | | | | | | | C | | | | | | | | | | | |
| U-fork end, metal, Ø 12,2 mm (increase "L" by 3 mm) | | | | | | | | | | D | | | | | | | | | | | |
| **Attachment orientation (clockwise)** | | | | | | | | | | | | | | | | | | | | | |
| 0° | | | | | | | | | | | 0 | | | | | | | | | | |
| 45° | | | | | | | | | | | 1 | | | | | | | | | | |
| 90° | | | | | | | | | | | 9 | | | | | | | | | | |
| 135° | | | | | | | | | | | 2 | | | | | | | | | | |
| **Housing material** | | | | | | | | | | | | | | | | | | | | | |
| ABS UL94 V0 | | | | | | | | | | | | | | U | | | | | | | |
| **Protection class (with power cable connected)** | | | | | | | | | | | | | | | | | | | | | |
| IP54 | | | | | | | | | | | | | | | 4 | | | | | | |
| IP56 | | | | | | | | | | | | | | | 6 | | | | | | |
| **Option 1** | | | | | | | | | | | | | | | | | | | | | |
| No option | | | | | | | | | | | | | | | | 0 | | | | | |
| Antipinching solution ("push only" actuator) | | | | | | | | | | | | | | | | 1 | | | | | |
| **Option 2** | | | | | | | | | | | | | | | | | | | | | |
| No option | | | | | | | | | | | | | | | | | 0 | | | | |
| With back-up nut (for "push" force) | | | | | | | | | | | | | | | | | 1 | | | | |
| **Option 3** | | | | | | | | | | | | | | | | | | | | | |
| No option | | | | | | | | | | | | | | | | | | 0 | | | |
| Motor with thermoswitch | | | | | | | | | | | | | | | | | | 1 | | | |
| **Option 4** | | | | | | | | | | | | | | | | | | | | | |
| No option | | | | | | | | | | | | | | | | | | | 0 | | |
| With dual encoder | | | | | | | | | | | | | | | | | | | 1 | | |
| **Option 5** | | | | | | | | | | | | | | | | | | | | | |
| No option | | | | | | | | | | | | | | | | | | | | 0 | |
| With actuator lifetime monitoring | | | | | | | | | | | | | | | | | | | | 1 | |

* Minimum retracted length when used together with control unit CAJC 41=325 mm and with CAJC 44/54=392 mm.

## CAJA 35C

The CAJA 35C is a powerful and compact pushing actuator incorporating a quick release mechanism. This actuator was specifically designed for the cardio-pulmonary resuscitation functions of a hospital bed. The force that activates the quick release is optimised (100 N max.) and can be customised. The maximum friction during the lowering process is very low (500 N max.). The CAJA 35C can be equipped with an activation cable. In homecare applications, where a cable is not needed, the quick release function can be deployed once the protective cover is removed with the proper tool.



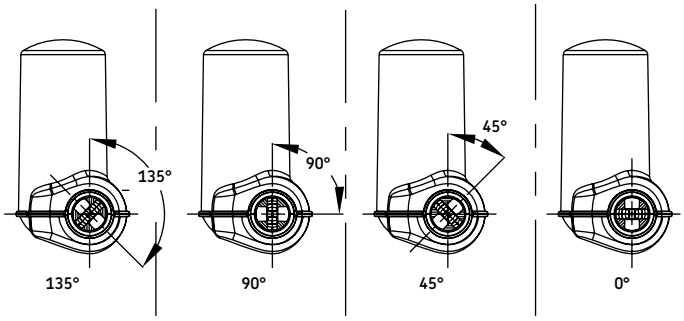


**Performance diagram:**

**Speed vs Load**

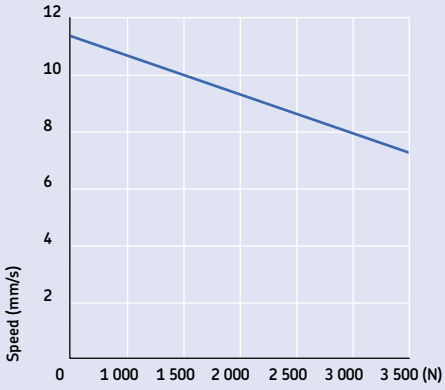


**Current vs Load**

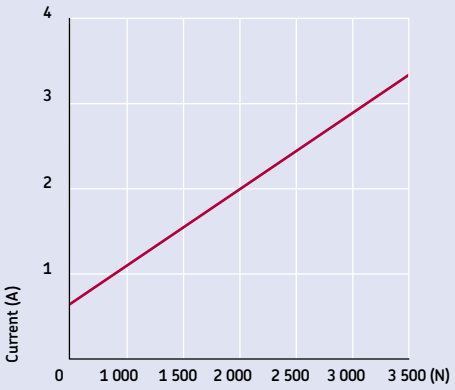


| Type | Force dynamic | static | Max. speed no load | full load | Stroke (S) | Retr. length* (L) | Voltage | Protection class | Weight |
|---|---|---|---|---|---|---|---|---|---|
| | N | N | mm/s | mm/s | mm | mm | VDC | IP | kg |
| **A35C** | 3 500 | 8 750 | 11,2 | 7,2 | 250 | S+180/183 | 24-41 | 54/56 | 2,5 (S=250)<br>2,1 (S=100) |

*Tolerance +/-2 mm (and in addition +3 mm if U fork is used as front attachment)

## CAJA 35C

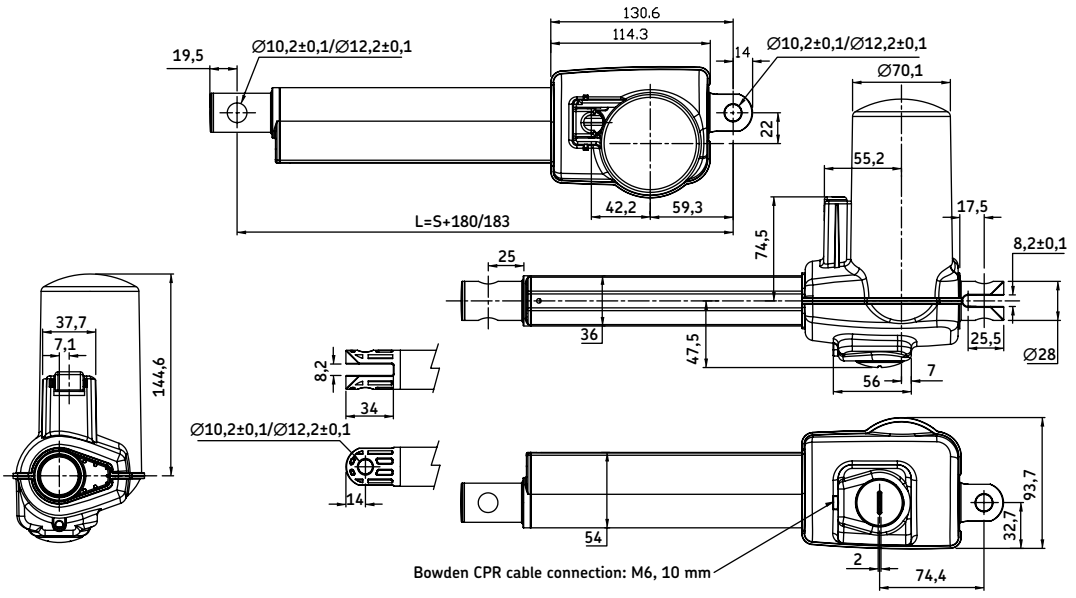


| C | A | J | A | 3 | 5 | C | | | | | | | | | | | | | | | | |
|---|---|---|---|---|---|---|---|---|---|---|---|---|---|---|---|---|---|---|---|---|---|---|

**Type**

**Stroke**

| | |
|---|---|
| 100 mm | 100 |
| 200 mm | 200 |
| 250 mm | 250 |
| All other customised strokes between 30 - 250 mm | XXX |

**Retracted length***

| | |
|---|---|
| Standard (L=S+180/183 mm) | 000 |
| Customised length >S+180/183 mm | XXX |

**Rear attachment**

| | |
|---|---|
| U-fork, metal, Ø 10,2 mm | A |
| U-fork, metal, Ø 12,2 mm | B |

**Front attachment**

| | |
|---|---|
| Tube with hole and metal bushings, Ø 10,2 mm | A |
| Tube with hole and metal bushings, Ø 12,2 mm | B |
| U-fork end, metal, Ø 10,2 mm (increase "L" by 3 mm) | C |
| U-fork end, metal, Ø 12,2 mm (increase "L" by 3 mm) | D |

**Attachment orientation (clockwise)**

| | |
|---|---|
| 0° | 0 |
| 45° | 1 |
| 90° | 9 |
| 135° | 2 |

**Housing material**

| | |
|---|---|
| ABS UL94 V0 | U |

**Protection class (with power and cables M6, 10 mm connected)**

| | |
|---|---|
| IP54 | 4 |
| IP56 | 6 |

**Option 1**

| | |
|---|---|
| No option | 0 |
| Antipinching solution ("push only" actuator) | 1 |

**Option 2**

| | |
|---|---|
| No option | 0 |
| With back-up nut (for "push" force) | 1 |

**Option 3**

| | |
|---|---|
| No option | 0 |
| Motor with thermoswitch | 1 |

**Option 4**

| | |
|---|---|
| No option | 0 |
| With dual encoder | 1 |

**Option 5**

| | |
|---|---|
| No option | 0 |
| With actuator lifetime monitoring | 1 |

* Minimum retracted length when used together with control unit CAJC 41=325 mm and with CAJC 44/54=392 mm.

## CAJA 60

The CAJA 60 is a powerful and compact pushing actuator for strokes of up to 300 mm. It also has a pulling capacity. The CAJA 60 is ideal for adjusting bed and table height or for positioning mattresses in bariatric applications.



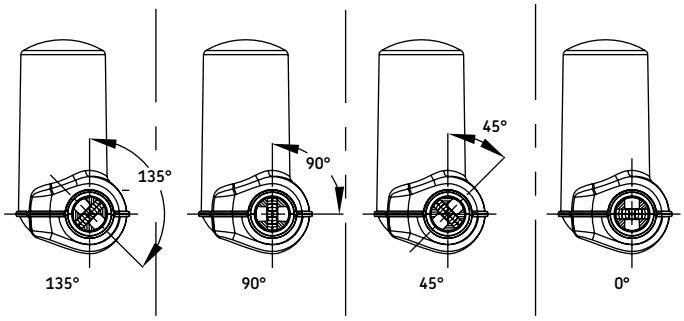


**Performance diagram:**

**Speed vs Load**

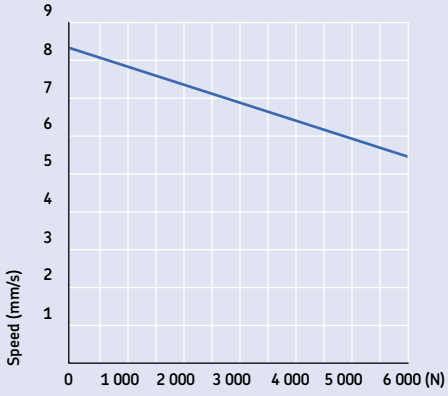


**Current vs Load**

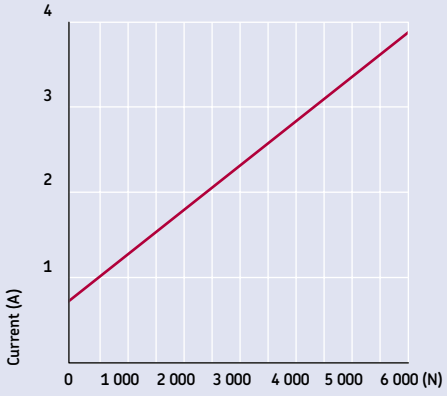


| Type | Force dynamic push | pull | static push | Max. speed no load | full load | Stroke (S) | Retr. length* (L) | Voltage | Protection class | Weight |
|---|---|---|---|---|---|---|---|---|---|---|
| | N | N | N | mm/s | mm/s | mm | mm | VDC | IP | kg |
| **A60** | 6 000 | 4 000 | 15 000 | 8,3 | 5,5 | 300 | S+167/170 | 24-41 | 54/56 | 2,5 (S=300)<br>1,9 (S=100) |

*Tolerance +/-2 mm (and in addition +3 mm if U fork is used as front attachment)

## CAJA 60

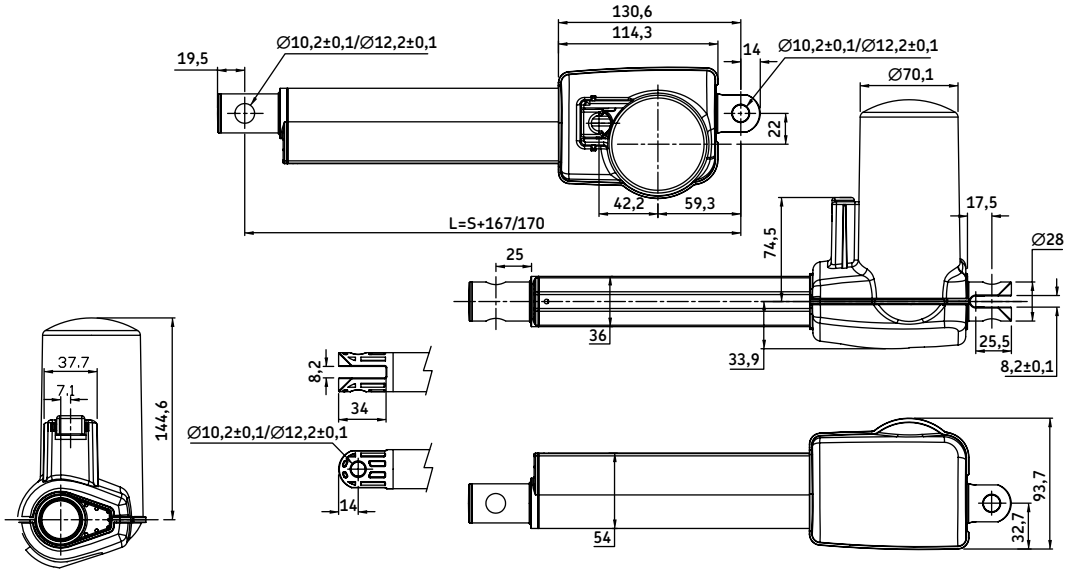


| C | A | J | A | 6 | 0 | | | | | | | | | | U | | | | | | | |
|---|---|---|---|---|---|---|---|---|---|---|---|---|---|---|---|---|---|---|---|---|---|---|

**Type**

**Stroke**

| | |
|---|---|
| 100 mm | 100 |
| 200 mm | 200 |
| 300 mm | 300 |
| All other customised strokes between 30 - 300 mm | XXX |

**Retracted length***

| | |
|---|---|
| Standard (L=S+167/170 mm) | 000 |
| Customised length >S+167/170 mm | XXX |

**Rear attachment**

| | |
|---|---|
| U-fork, metal, Ø 10,2 mm | A |
| U-fork, metal, Ø 12,2 mm | B |

**Front attachment**

| | |
|---|---|
| Tube with hole and metal bushings, Ø 10,2 mm | A |
| Tube with hole and metal bushings, Ø 12,2 mm | B |
| U-fork end, metal, Ø 10,2 mm (increase "L" by 3 mm) | C |
| U-fork end, metal, Ø 12,2 mm (increase "L" by 3 mm) | D |

**Attachment orientation (clockwise)**

| | |
|---|---|
| 0° | 0 |
| 45° | 1 |
| 90° | 9 |
| 135° | 2 |

**Housing material**

| | |
|---|---|
| ABS UL94 V0 | U |

**Protection class (with power cable connected)**

| | |
|---|---|
| IP54 | 4 |
| IP56 | 6 |

**Option 1**

| | |
|---|---|
| No option | 0 |
| Antipinching solution ("push only" actuator) | 1 |

**Option 2**

| | |
|---|---|
| No option | 0 |
| With back-up nut (for "push" force) | 1 |

**Option 3**

| | |
|---|---|
| No option | 0 |
| Motor with thermoswitch | 1 |

**Option 4**

| | |
|---|---|
| No option | 0 |
| With dual encoder | 1 |

**Option 5**

| | |
|---|---|
| No option | 0 |
| With actuator lifetime monitoring | 1 |

* Minimum retracted length when used together with control unit CAJC 41=325 mm and with CAJC 44/54=392 mm.

**Control boxes**
CAJC control boxes were specially designed to drive up to 5 CAJA actuators. Two models of the CAJC control box are available: The CAJC 41 and the CAJC 44/54.
The CAJC 41 is particularly suitable for homecare beds while the CAJC 44/54 with its extended safety and life time features, is suited for hospital beds. Both control boxes conform to EN IEC 60.601.1 and UL 60.601.1

**CAJC 41** supports the CAJH 1 handset.

**CAJC 44/54** supports each of the following: locking function, battery, external switches, CAJH 4 handset, CAJP 4 nurse panel and CAJB battery.

**CAJC 44/54**





**CAJC 41**





| | Number of channels | Current | Voltage | Duty cycle | Class | Protection class | Weight |
|---|---|---|---|---|---|---|---|
| | | A | VAC/Hz | min. ON/ min. OFF | | IP | kg |
| **CAJC 41** | 4 | 5 | 120/60, 230/50 | 2/18 | II, I with earth terminal | 54/66 | 2,3 |
| **CAJC 44** | 4 | 5,5 | 120/60, 230/50 | 2/18 | II, I with earth terminal | 54/66 | 2,5 |
| **CAJC 54** | 5 | 5,5 | 120/60, 230/50 | 2/18 | II, I with earth terminal | 54/66 | 2,5 |

The class I that provides a earth terminal requests a cable 3 poles

## Control boxes

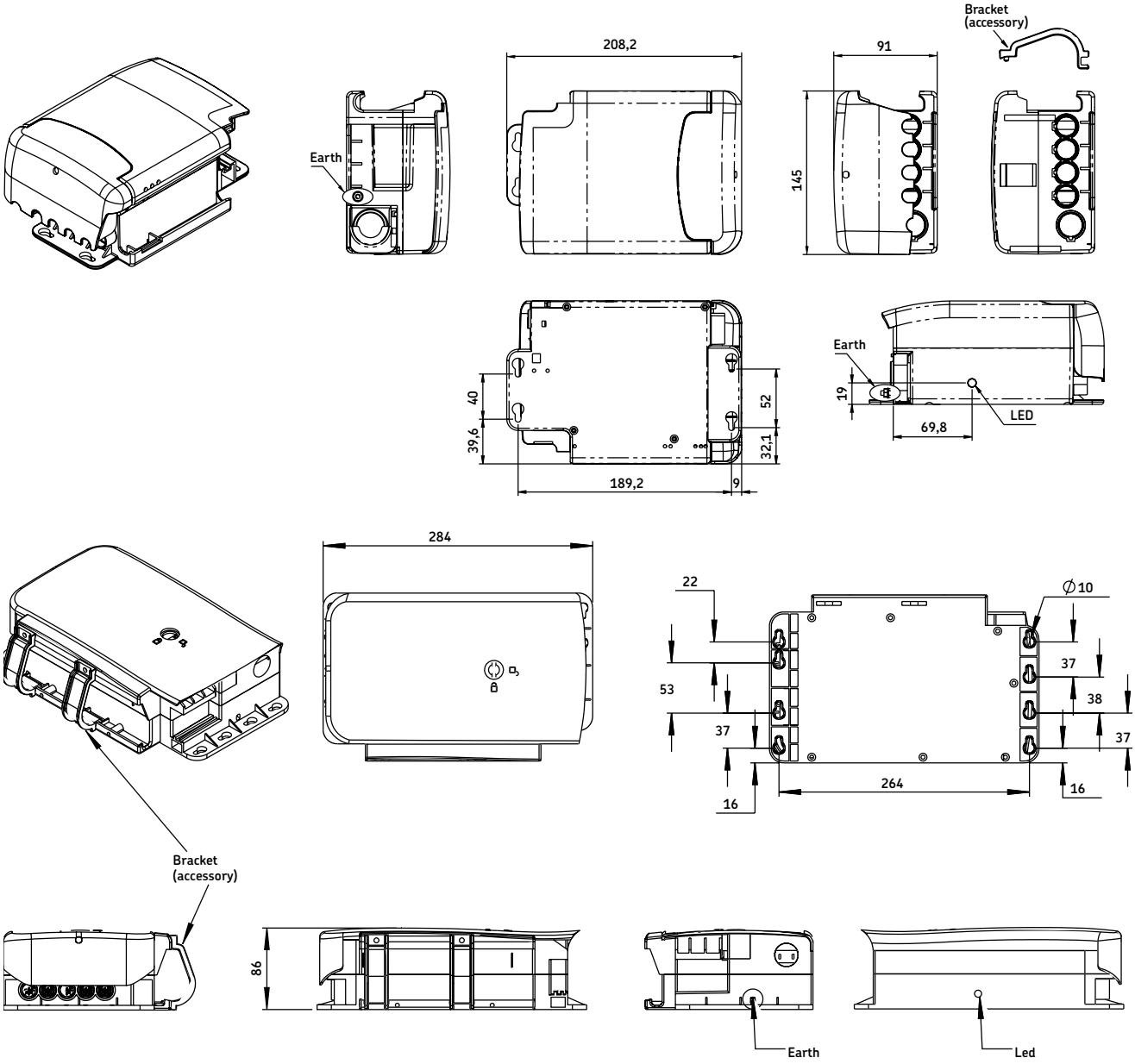


| | | | | | | | | | | |
|---|---|---|---|---|---|---|---|---|---|---|
| **Type** | C | A | J | C | | | | | | - |
| **Channels** | | | | | | | | | | |
| Four (4) channels | | | | | 4 | | | | | |
| Five (5) channels | | | | | 5 | | | | | |
| **Connections (sockets)** | | | | | | | | | | |
| For 1 handset (only with 4 channels) | | | | | | 1 | | | | |
| For 2 handsets, 1 battery, 1 external switch (only for 5 channels) | | | | | | 4 | | | | |
| **Voltage** | | | | | | | | | | |
| 120 VAC 60 Hz | | | | | | | 1 | | | |
| 230 VAC 50 Hz | | | | | | | 2 | | | |
| **Class** | | | | | | | | | | |
| Class I (with earth terminal) | | | | | | | | 1 | | |
| Class II | | | | | | | | 2 | | |
| **Protection class** | | | | | | | | | | |
| IP54 | | | | | | | | | 4 | |
| IP66 | | | | | | | | | 6 | |
| **Functionality for operating devices CAJH 4 and CAJP 4 (for CAJC 44/54 only)** | | | | | | | | | | |
| Button rows no. 1 = channel 1, row 2 = channel 2, row 3 = channel 3, row 4 = channel 1+2, row 5 = channel 4 | | | | | | | | | | A |
| Button rows no. 1 = channel 1, row 2 = channel 2, row 3 = channel 1+2, row 4 = channel 3+4, row 5 = channel 3-4 | | | | | | | | | | B |
| Button rows no. 1 = channel 1, row 2 = channel 2, row 3 = channel 3, row 4 = channel 4, row 5 = channel 5 | | | | | | | | | | C |

## CAJH 1

The CAJH 1 high-quality, ergonomically designed handset can control as many as 5 functions of 4 different actuators when connected to the CAJC 41 control unit.
The LED indicates the activation.
The keyboard with braille can be used by blind people.



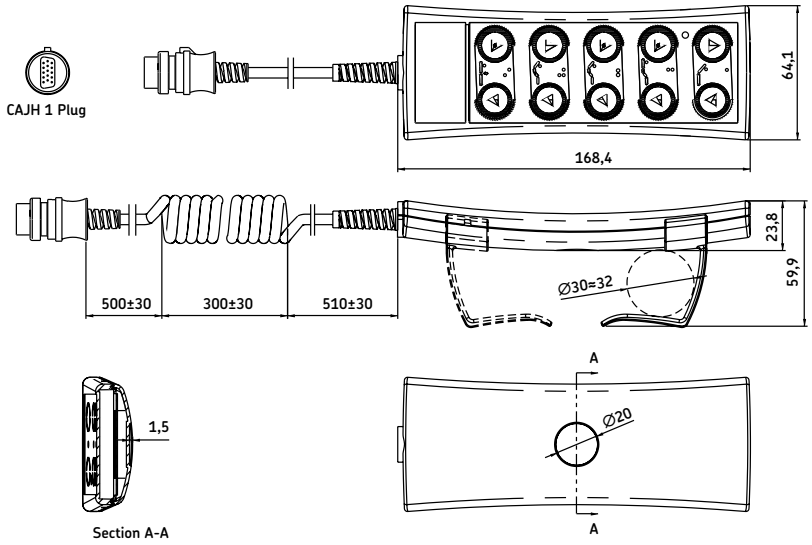


| | | | | | | | | | | |
|---|---|---|---|---|---|---|---|---|---|---|
| | | | | | | | | | | |
| **Type** | C | A | J | H | 1 | | | | | |
| **Functions*** | | | | | | | | | | |
| 1 function: | | | | | | | | | | |
| Arrow up/down | | | | | | 100 | | | | |
| Hi-Lo (1 or 2 actuators in parallel) | | | | | | 1B0 | | | | |
| Back (1 actuator) | | | | | | 1A0 | | | | |
| 2 functions: | | | | | | | | | | |
| Back (1 actuator)+Knee (1 actuator) | | | | | | 2A0 | | | | |
| Back (1 actuator)+Hi-Lo (1 or 2 actuators) | | | | | | 2B0 | | | | |
| Hi-Lo (1 actuator)+Proclive/Declive (1 actuator) | | | | | | 2A1 | | | | |
| Hi-Lo (2 actuators)+Proclive/Declive (2 actuators in opposite) | | | | | | 2B1 | | | | |
| 3 functions: | | | | | | | | | | |
| Back (1 actuator)+Knee (1 actuator)+Hi-Lo (1 or 2 actuators) | | | | | | 3B0 | | | | |
| 4 functions: | | | | | | | | | | |
| Back (1 actuator)+Knee (1 actuator)+Foot (1 actuator)+Hi-Lo (1 actuator) | | | | | | 4A0 | | | | |
| Back (1 actuator)+Knee (1 actuator)+Chair (Back+Leg)+Hi-Lo (1 or 2 actuators) | | | | | | 4B0 | | | | |
| 5 functions: | | | | | | | | | | |
| Back (1 actuator)+Knee (1 actuator)+Foot (1 actuator)+Chair (B+L)+Hi-Lo (1 actuator) | | | | | | 5A0 | | | | |
| Back (1 actuator)+Knee (1 actuator)+Chair (B+L)+Hi-Lo (2 actuators)+Trendelenburg/reverse Trendelenburg (2 actuators) | | | | | | 5B0 | | | | |
| **Suspension** | | | | | | | | | | |
| No | | | | | | | 0 | | | |
| Hook | | | | | | | 1 | | | |
| **Logo** | | | | | | | | | | |
| No | | | | | | | | 0 | | |
| Logo according to customer specification | | | | | | | | 1 | | |
| **Cable** | | | | | | | | | | |
| Coiled, 1,35 m | | | | | | | | | A | |
| **Protection class** | | | | | | | | | | |
| IP66 | | | | | | | | | | 6 |

* see foils on the next page

## Standard foil design

Functions / Channels

100




Functions / Channels

2A0

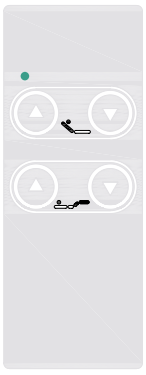


Functions / Channels

3B0

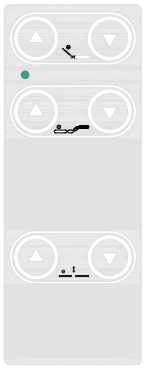


Functions / Channels

4A0

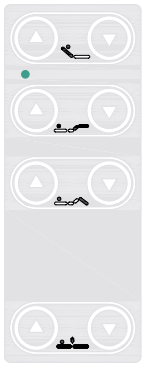


Functions / Channels

5A0

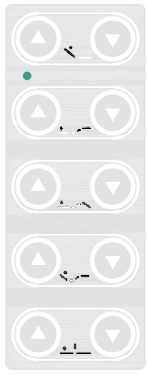


1A0

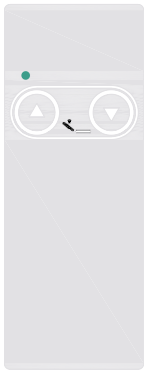


2A1

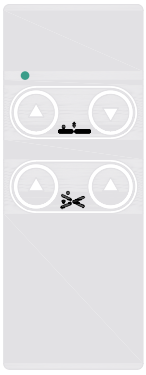


4B0

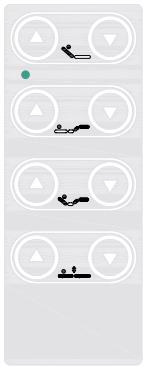


5B0

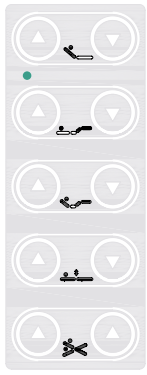


1B0

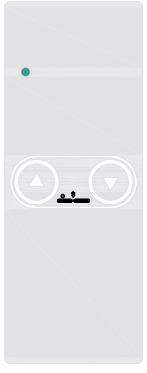


2B0




2B1



## CAJH 4

The CAJH 4 high-quality, ergonomically designed handset can control as many as 5 functions of 5 different actuators when connected to the CAJC 44/54 control unit. This handset can also be connected to the CAJP 4 nurse panel.
The LED 2 colors indicates the battery power. The keyboard with braille can be used by blind people.



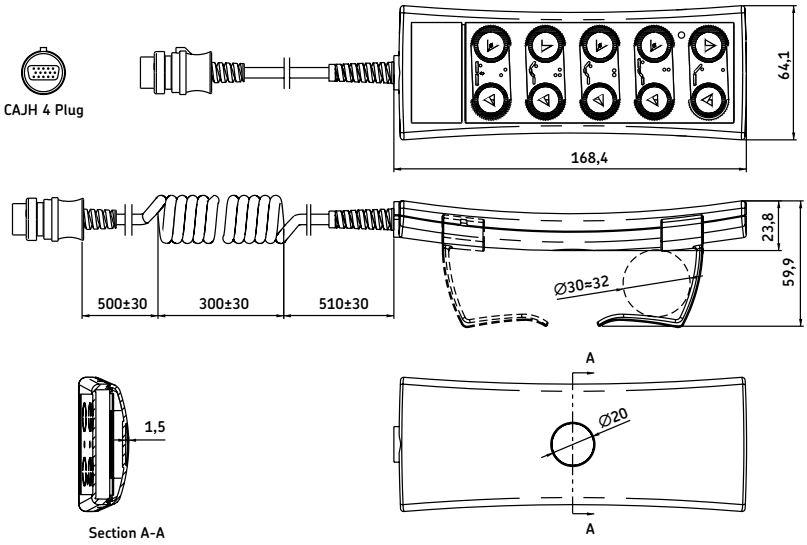


| | | | | | | | | | |
|---|---|---|---|---|---|---|---|---|---|
| | | | | | | | | | |
| **Type** | C | A | J | H | 4 | | | | |
| **Functions*** | | | | | | | | | |
| 1 function: | | | | | | | | | |
| Arrow up/down | | | | | | 100 | | | |
| Hi-Lo | | | | | | 1B0 | | | |
| Back | | | | | | 1A0 | | | |
| 2 functions: | | | | | | | | | |
| Back+Knee | | | | | | 2A0 | | | |
| Back+Hi-Lo | | | | | | 2B0 | | | |
| Hi-Lo+Proclive/Declive | | | | | | 2A1 | | | |
| Hi-Lo+Proclive/Declive | | | | | | 2B1 | | | |
| 3 functions: | | | | | | | | | |
| Back+Knee+Hi-Lo | | | | | | 3B0 | | | |
| 4 functions: | | | | | | | | | |
| Back+Knee+Foot+Hi-Lo | | | | | | 4A0 | | | |
| Back+Knee +Chair+Hi-Lo | | | | | | 4B0 | | | |
| 5 functions: | | | | | | | | | |
| Back+Knee+Foot+Chair+Hi-Lo | | | | | | 5A0 | | | |
| Back+Knee+Chair+Hi-Lo+Trendelenburg/reverse Trendelenburg | | | | | | 5B0 | | | |
| Back+Knee+Foot+Hi-Lo+Trendelenburg/reverse Trendelenburg | | | | | | 5C0 | | | |
| Arrow up/down | | | | | | 500 | | | |
| **Suspension** | | | | | | | | | |
| No | | | | | | | 0 | | |
| Hook | | | | | | | 1 | | |
| **Logo** | | | | | | | | | |
| No | | | | | | | | 0 | |
| Logo according to customer specification | | | | | | | | 1 | |
| **Cable** | | | | | | | | | |
| Coiled, 1,35 m | | | | | | | | | A |
| **Protection class** | | | | | | | | | |
| IP66 | | | | | | | | | 6 |

* see foils on the next page

## Standard foil design

Functions / Rows

100




Functions / Rows

2A0

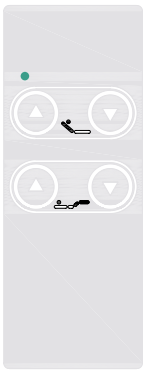


Functions / Rows

3B0

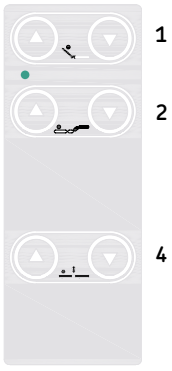


Functions / Rows

4A0

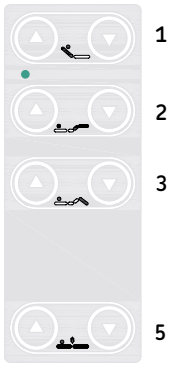


Functions / Rows

5A0

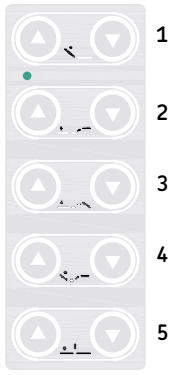


1A0

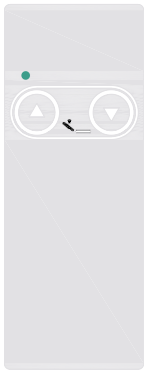


2A1

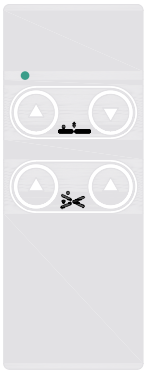


4B0

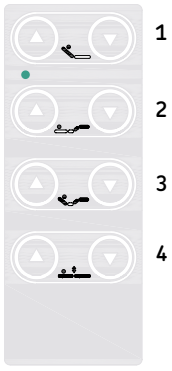


5B0

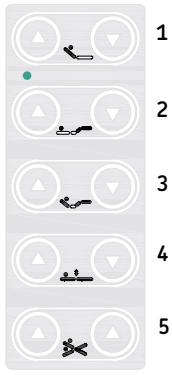


1B0

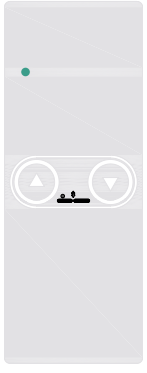


2B0




5C0

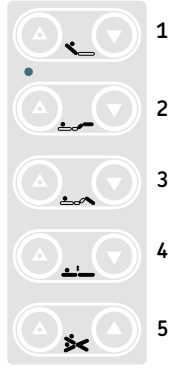


2B1




500

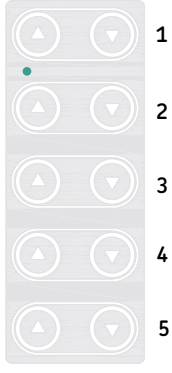

## Nurse panel



### CAJP 4

The CAJP 4 nurse panel is designed for use with the CAJC 44/54 control panel. The dual keys control the locking function managed by the control box CAJC 44/54. Extra keys provide specific functionality to improve ergonomics and patient comfort. Two nurse panels can be connected to a control box and each of the nurse panels can accommodate 2 handsets.
The LED 2 colors indicates the battery power.

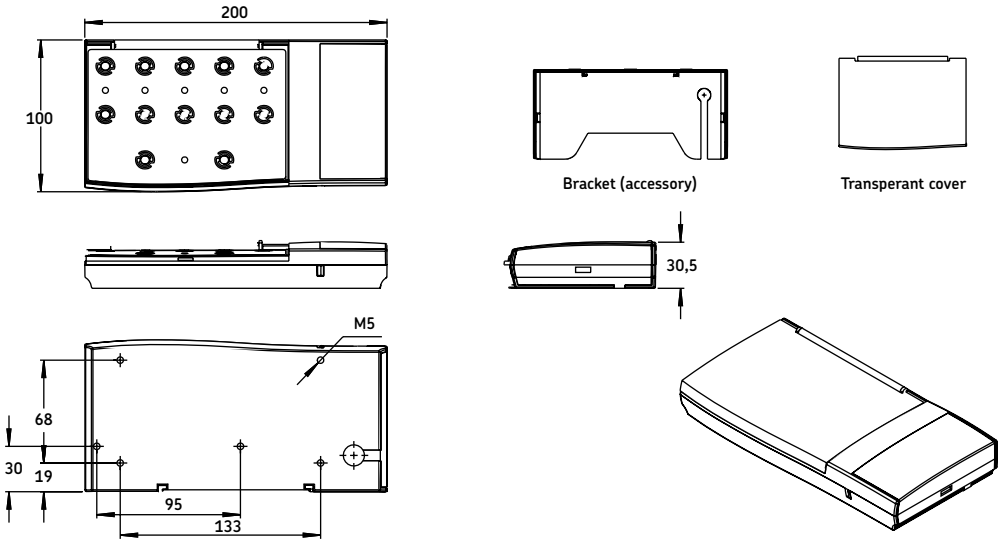


| | C | A | J | P | 4 | | | | | A | |
|---|---|---|---|---|---|---|---|---|---|---|---|
| **Type** | | | | | | | | | | | |
| **Functions** | | | | | | | | | | | |
| 4 functions: | | | | | | | | | | | |
| Back+Knee+Foot+Hi-Lo | | | | | | 4 | A | 0 | | | |
| Back+Knee+Chair+Hi-Lo | | | | | | 4 | A | 1 | | | |
| 5 functions: | | | | | | | | | | | |
| Back+Knee+Foot+Chair+Hi-Lo | | | | | | 5 | A | 0 | | | |
| Back+Knee+Chair+Hi-Lo+Trendelenburg/reverse Trendelenburg | | | | | | 5 | B | 0 | | | |
| Back+Knee+Foot+Hi-Lo+Trendelenburg/reverse Trendelenburg | | | | | | 5 | C | 0 | | | |
| **Logo** | | | | | | | | | | | |
| No | | | | | | | | | 0 | | |
| Logo according to customer specification | | | | | | | | | 1 | | |
| **Cable** | | | | | | | | | | | |
| Coiled, 1,35 m | | | | | | | | | | A | |
| **Protection class** | | | | | | | | | | | |
| IP54 | | | | | | | | | | | 4 |
| IP66 | | | | | | | | | | | 6 |

## Mains cables

| Suitable for CAJC, VCU and SCU | | Length (mm) | Poles (N°)* |
|---|---|---|---|
| **G56020-94302, (ZKA-160608-3500)**<br>With "Euro-plug" | 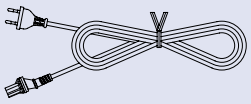 | 3 500 | 2 |
| **G56020-094301, (ZKA-160609-3500)**<br>With "British-plug" | 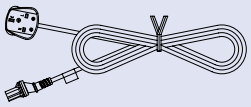 | 3 500 | 3 |
| **G56020-094306 (ZKA-160610-3500)**<br>With "US-plug" | 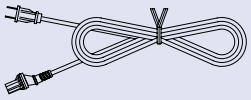 | 3 500 | 2 |
| **G56020-094305, (ZKA-160637-3500)**<br>With "Schuko-plug" | 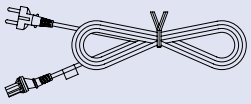 | 3 500 | 3 |
| **G56020-094304, (ZKA-160638-3500)**<br>With "SEV-plug" | 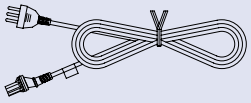 | 3 500 | 3 |
| **G56020-094303, (ZKA-160639-3500)**<br>With "US-plug" | 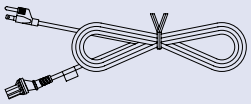 | 3 500 | 3 |
| **G56020-094307, (ZKA-160640-3500)**<br>With "Hospital grade plug" | 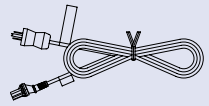 | 3 500 | 3 |
| **G56020-094308**<br>With "Schuko-plug" | 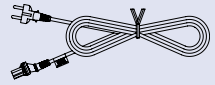 | 3 500 | 2 |
| **G56020-094310**<br>EPR cable with "Schuko-plug" | 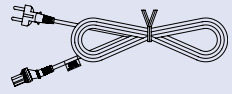 | 3 500 | 3 |
| **G56020-094311**<br>With AS3112 plug | 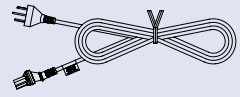 | 3 500 | 3 |
| **Straight motor cable (CAJA)** | 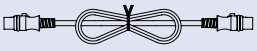 | | |
| G516B0-094001 | | 460 | |
| G516B0-094002 | | 1 350 | |
| G516B0-094003 | | 2 650 | |
| G516B0-094004 (for encoder) | | 1 350 | |
| G516B0-094005 (for encoder) | | 2 650 | |

**Sealing plugs**
G56020-010102 Sealing plug for actuator socket (the CAJC41 is delivered with 3 sealing plugs)
G56020-010104 Sealing plug for handset socket

**Bracket CAJC**
G56020-213601 (CAJC41 needs 1 bracket, the CAJC44/54 need 2 brackets)

* 2 poles suitable for class II only
3 poles suitable for class I and class II







# Contacts

## Linear motion from SKF
www.linearmotion.skf.com


**Benelux**
**SKF Multitec Benelux B.V.**
Nederland
Tel +31 030 6029 029
Fax +31 030 6029 028

België & Luxembourg
Tel +32 25 024 270
Fax +32 25 027 336
E-mail multitec_benelux@skf.com

**Brasil**
**SKF do Brasil Ltda**
Tel +55 11 461 991 114
Fax +55 11 461 991 99
E-mail marketing.skf@skf.com.br

**Canada**
**SKF Canada Limited**
Tel +1 416 299 1220
Fax +1 416 299 6548
E-mail www.marketing@skf.ca

**Danmark**
**SKF Multitec**
Tel +45 65 92 77 77
Fax +45 65 92 74 77
E-mail customerservice.multitec@skf.com

**Deutschland**
**SKF Linearsysteme GmbH**
Tel +49 9721 657 232/233
Fax +49 9721 657 111
E-mail lin.sales@skf.com

**Magnetic Elektromotoren GmbH**
Tel +49 7622 695 0
Fax +49 7622 695 101
E-mail magnetic.germany@skf.com

**España & Portugal**
**SKF Productos Industriales S.A.**
Tel +34 93 377 99 07/-77
Fax +34 93 474 2039/-2156
E-mail prod.ind@skf.com

**France**
**SKF Equipements**
Tel +33 1 30 12 73 00
Fax +33 1 30 12 69 09
E-mail equipements.france@skf.com

**Italia**
**SKF Multitec S.p.A.**
Tel +39 011 22 49 01
Fax +39 011 22 49 233
E-mail multitec.italy@skf.com

**Mexico**
**SKF de México S.A. de C.V**
Tel +52 222 229 4900
Fax +52 222 229 4908
Web www.skf.com.mx

**Norge**
**SKF Multitec**
Tel +47 22 90 50 00
Fax +47 22 30 28 14
E-mail customerservice.multitec@skf.com

**Schweiz**
**Magnetic Elektromotoren AG**
Tel +41 52 305 02 02
Fax +41 52 305 02 05
E-mail magnetic.switzerland@skf.com

**SKF LM&PT**
Tel +41 44 825 81 81
Fax +41 44 825 82 82
E-mail skf.schweiz@skf.com

**Suomi**
**SKF Multitec**
Tel +358 9 615 00 850
Fax +358 9 615 00 851
E-mail multitec.nordic@skf.com

**Sverige**
**SKF Multitec**
Tel +46 42 253 500
Fax +46 42 253 545
E-mail customerservice.multitec@skf.com

**U.K.**
**SKF (UK) Ltd**
Tel +44 1582 496 735
Fax +44 1582 496 574
E-mail a&mc@skf.com

**USA**
**SKF Motion Technologies**
Tel +1 610 861 3700
Toll free +1 800 541 3624
Fax +1 610 861 3716
E-mail motiontech.usa@skf.com

**Österreich**
**SKF Linearsysteme GmbH**
Tel +49 9721 657 232/233
Fax +49 9721 657 111
E-mail: lin.sales@skf.com

**Other countries**
Fax +41 61 921 37 04
E-mail actuators@skf.com



® SKF is a registered trademark of the SKF Group.

© SKF Group 2007.
The contents of this publication are the copyright of the publisher and may not be reproduced (even extracts) unless prior written permission is granted. Every care has been taken to ensure the accuracy of the information contained in this publication but no liability can be accepted for any loss or damage whether direct, indirect or consequential arising out of the use of the information contained herein.


Publication - **6313 EN - 0706A** Printed in Sweden